RoHS
COMPLIANT

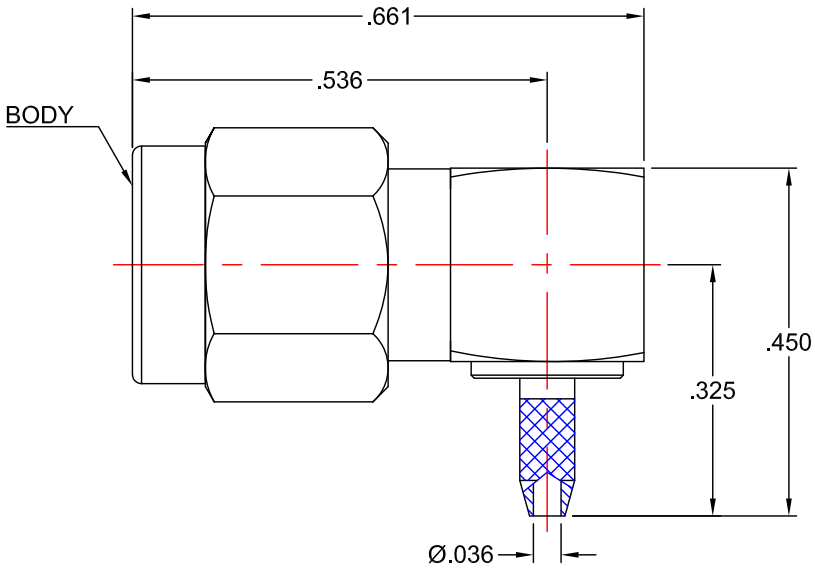

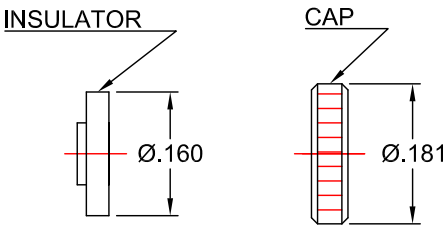

NOTES:

INTERFACE CONFORMS TO MIL-PRF-39012
AND MIL-STD-348 SMA SERIES

ELECTRICAL:

NOMINAL IMPEDANCE: 50Ω
FREQUENCY RANGE: DC TO 12 GHz

MATERIALS:

INSULATORS: TEFLON PER ASTM-D-1710
CONTACT: BERYLLIUM COPPER PER ASTM-B-196
BODY: STAINLESS STEEL PER ASTM-A-582 TYPE 303
GASKET: SILCONE RUBBER PER ZZ-R-765
COUPLING NUT & CAP: STAINLESS STEEL PER ASTM-B-582 TYPE 303

FINISHES:

CONTACT: GOLD PLATE PER MIL-DTL-45204
BODY, CAP, & COUPLING NUT: PASSIVATE PER QQ-P-35

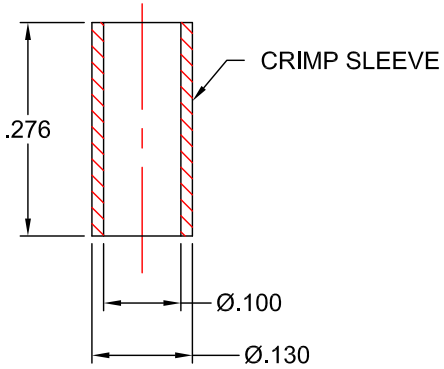

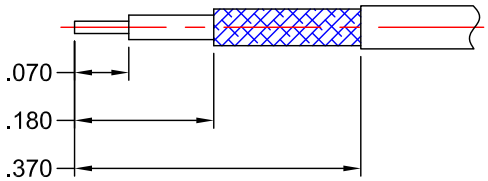

RECOMMENDED STRIPPING DIMENSIONS

PROPRIETARY NOTICE
THIS DRAWING AND DESIGNES AND IDEAS EMBEDDED IN THE DEVICE TO WHICH IT RELATES AND THE METHOD OF PRODUCING THE DEVICE SHALL NOT BE EMPLOYED COPIED OR DISCLOSED TO ANYONE IN ANY MANNER WITHOUT THE WRITTEN CONSENT OF AN EZ FORM COMPANY OFFICIAL

APPD.	T.D.	
DATE	03/20/17	
BY	J.N.	
DATE	03/20/17	
DESCRIPTION	INITIAL RELEASE	
REV.	—	

UNLESS OTHERWISE SPECIFIED:
DIMENSIONS ARE IN INCHES:
TOLERANCES: NONE

SCALE 4:1

MATERIAL: SEE NOTES

FINISH: SEE NOTES

DRAWN	DATE	CHECKED	DATE
J.N.	03/20/17	T.D.	03/20/17
APPROVED	DATE	SHEET 1 OF 1	
A.T.	03/20/17		

EZ Form Cable Corporation
285 Welton Street
Hamden, CT 06517
WWW.ezform.com

TITLE
SMA RIGHT ANGLE PLUG
FOR RG-178 CABLE

A	CODE IDENT. 9W826	705559-001SMA	REV. -